VERSATILE DIGITAL PANEL METER — MODEL 15660

DESCRIPTION

The 15660 is a streamlined, low-cost, utility, dc voltage measuring meter. The unit has a standard input range of ±2V. The easy-to-use screw terminals and provision to "Hold" the displayed reading indefinitely make this a cost-effective solution for display of most analog signals.

Ease-of-use and quick installation are facilitated by the unique pinout of the series. The standard meter is provided with screw terminal blocks and insulated quick disconnects.

FEATURES

- 0.56" LED Display
- Screw Terminals for Easy Connection
- Selectable Decimal Point Position

CE

SPECIFICATIONS

INPUT

Voltage Range .... Standard .....±2Vdc
Selectable ..... ±20Vdc, ±200Vdc
Impedance .....1MΩ, minimum

INSTRUMENT POWER

Standard 120/240V, 50/60Hz, 2.5VA

DISPLAY .....0.56" LED Display

ACCURACY ..... ±0.05% of reading + 3 digits

TEMPERATURE

Operating Range.....+10ºC to +50ºC

CASE DIMENSIONS AND CONNECTION DIAGRAM

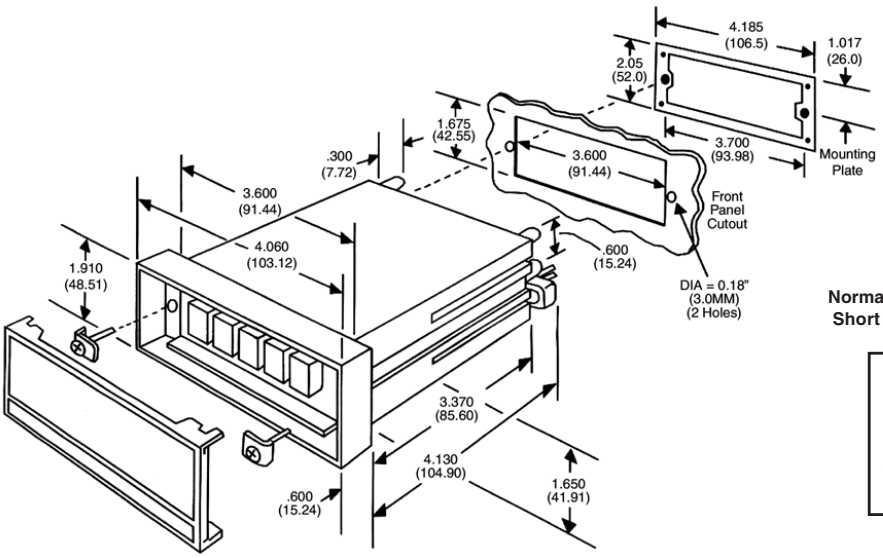

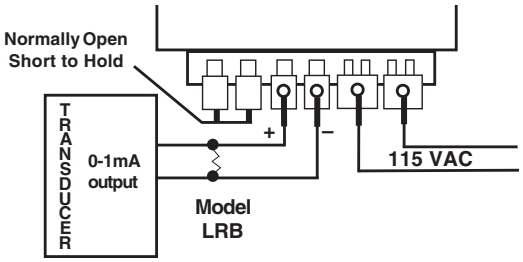

Dimensions in inches (mm)

Dwg# 0902-00894-B

OHIO SEMITRONICS, INC.
4242 REYNOLDS DRIVE * HILLIARD, OHIO * 43026-1264
PHONE: (614) 777-1005 * FAX: (614) 777-4511
WWW.OHIOSEMITRONICS.COM * 1-800-537-6732